1

Door hinge - 201

glass/glass

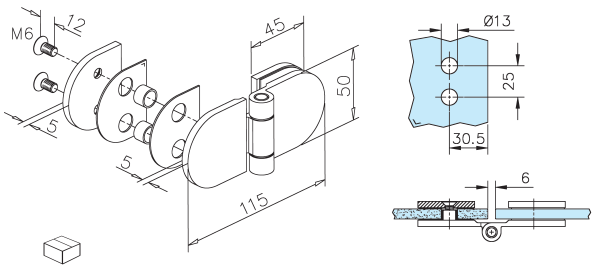

Stainless steel design Art.no.	Chrome design Art.no.	glass	
41.0201.000.12	41.0201.000.10	6 - 10 mm	1

Door hinge - 202

glass/wall

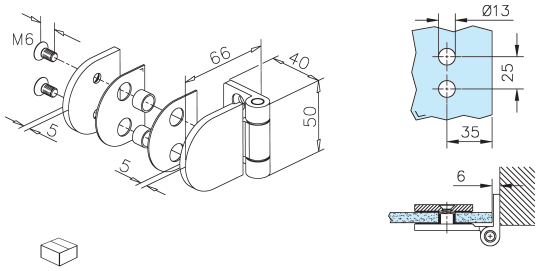

Stainless steel design Art.no.	Chrome design Art.no.	glass	
41.0202.000.12	41.0202.000.10	6 - 10 mm	1

INFO 41.0202.000...

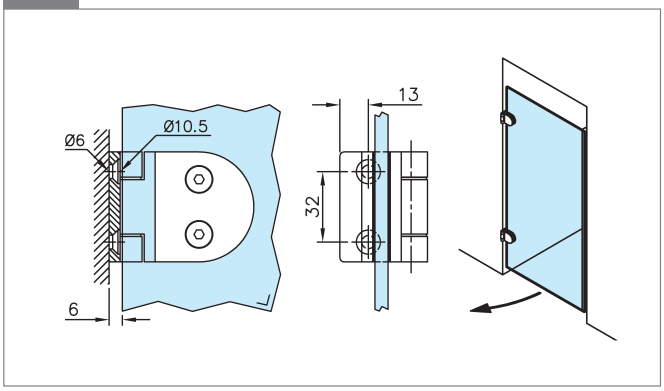

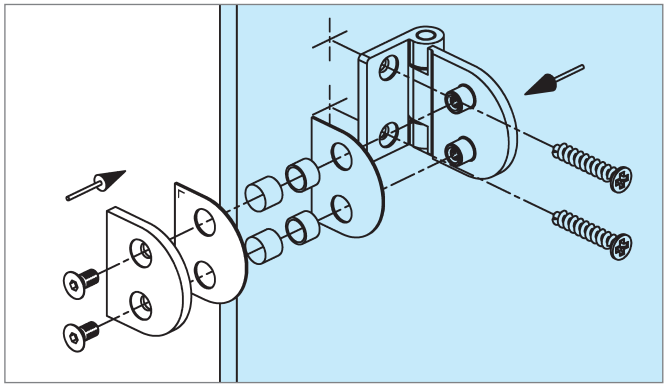

INFO

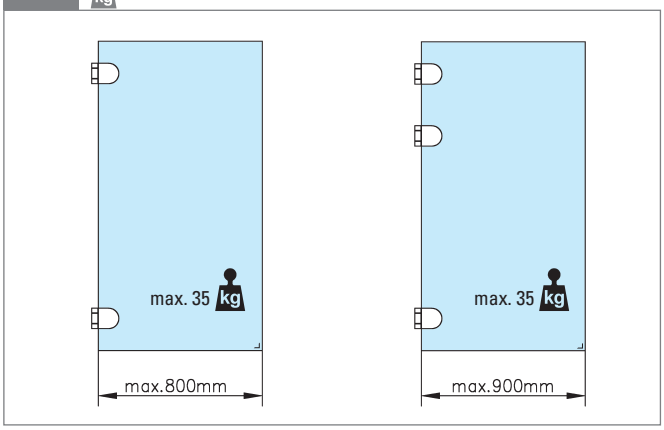

Wall fixations
106

Door hinge - 301

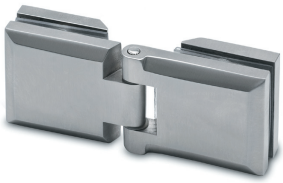

glass/glass

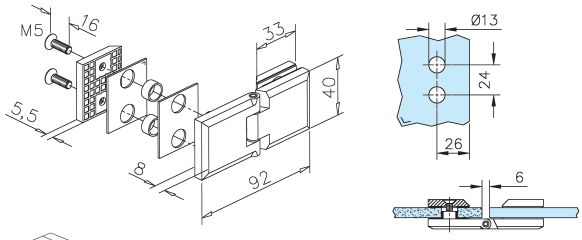

Stainless steel design Art.no.	Chrome design Art.no.	glass	
41.0301.000.12	41.0301.000.10	6 - 10 mm	1

Door hinge - 302

glass/wall

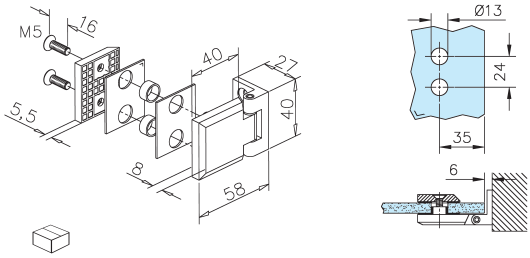

Stainless steel design Art.no.	Chrome design Art.no.	glass	
41.0302.000.12	41.0302.000.10	6 - 10 mm	1

Door hinge - 401

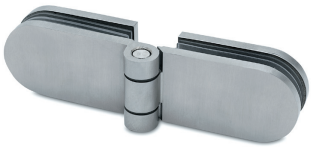

glass/glass

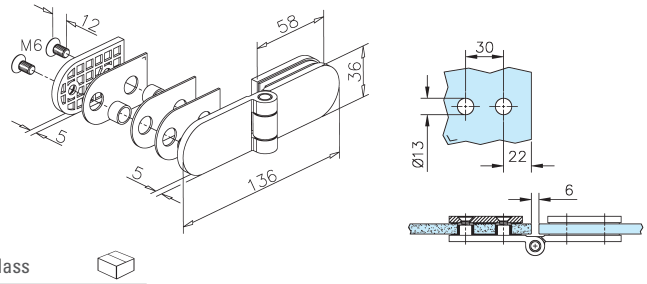

Stainless steel design Art.no.	Chrome design Art.no.	glass	
41.0401.000.12	41.0401.000.10	6 - 10 mm	1

Door hinge - 402

glass/wall

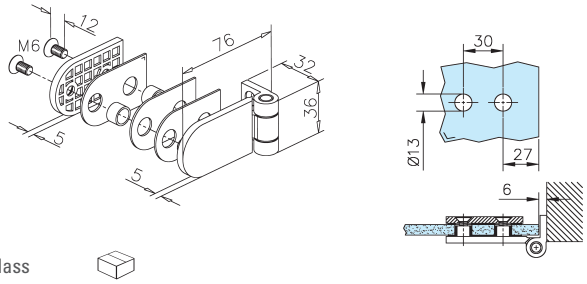

Stainless steel design Art.no.	Chrome design Art.no.	glass	
41.0402.000.12	41.0402.000.10	6 - 10 mm	1

1

Door hinge - 501

glass/wall

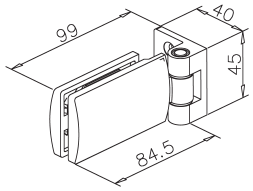

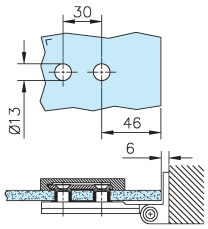

Stainless steel design Art.no.	Chrome design Art.no.	glass	
41.0501.090.12	41.0501.090.10	6 - 10 mm	2

Door hinge - 502

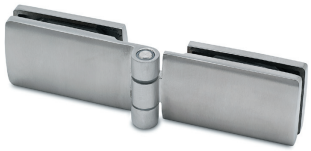

glass/glass

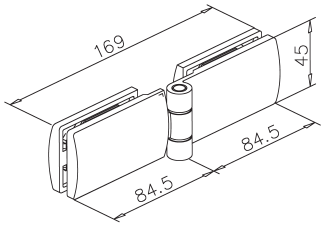

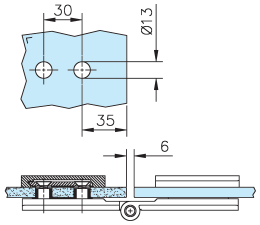

Stainless steel design Art.no.	Chrome design Art.no.	glass	
41.0502.180.12	41.0502.180.10	6 - 10 mm	1

Door hinge - 503

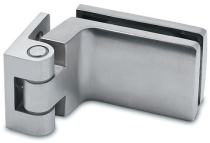

glass/wall

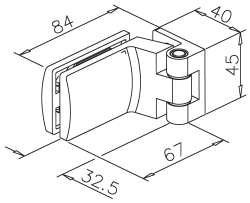

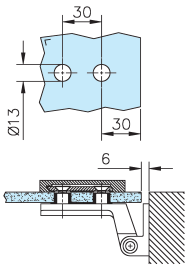

Stainless steel design Art.no.	Chrome design Art.no.	glass	
41.0503.090.12	41.0503.090.10	6 - 10 mm	1

INFO kg

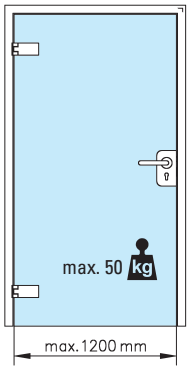

INFO 41.0501.090...

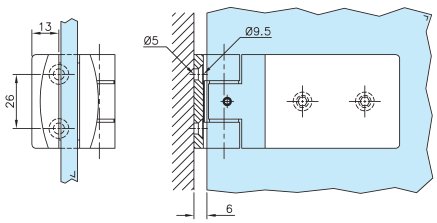

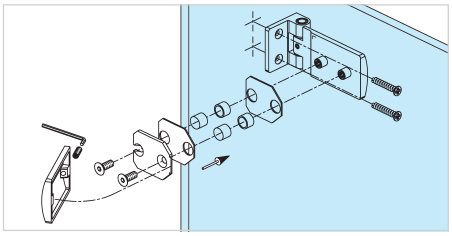

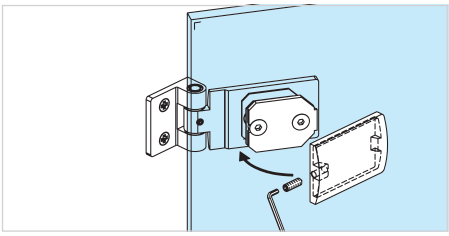

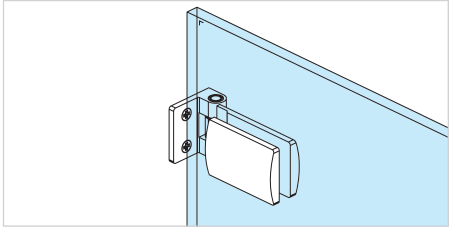

Door hinge - 2701

glass/glass

Stainless steel design Art.no.	Chrome design Art.no.	glass	
45.2701.000.12	45.2701.000.10	10 - 12 mm	2

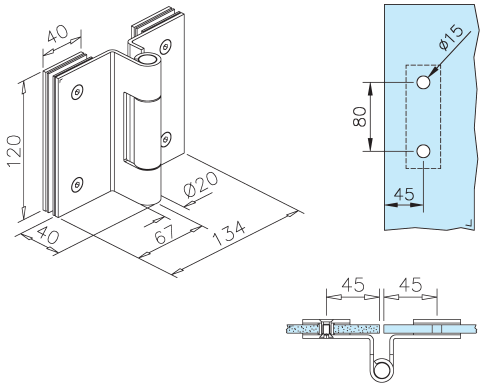

Door hinge - 2702

glass/wood

Stainless steel design Art.no.	Chrome design Art.no.	glass	
45.2702.000.12	45.2702.000.10	10 - 12 mm	2

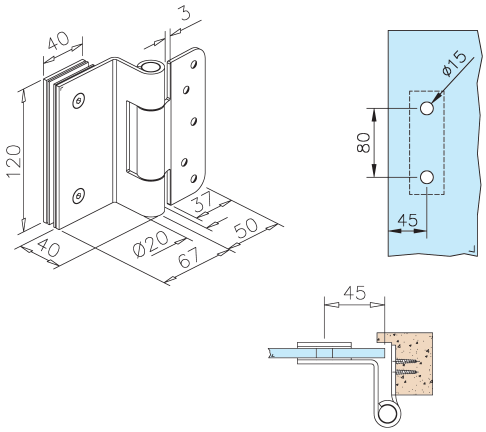

INFO

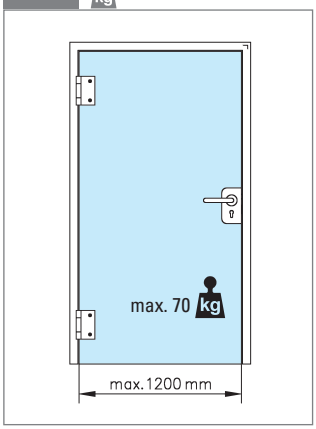

INFO 45.2701.000...

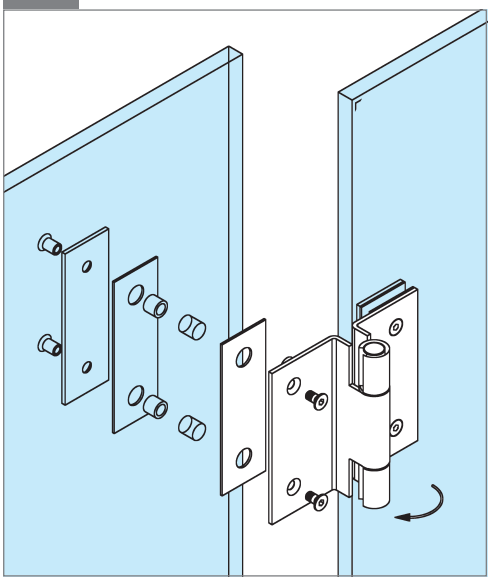

INFO 45.2702.000...

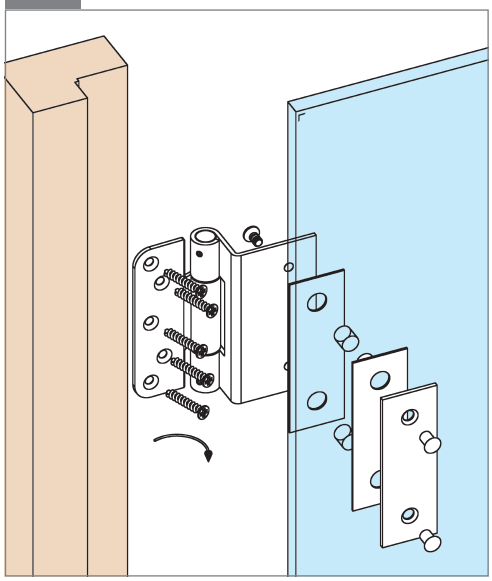

Door hinge - 2250

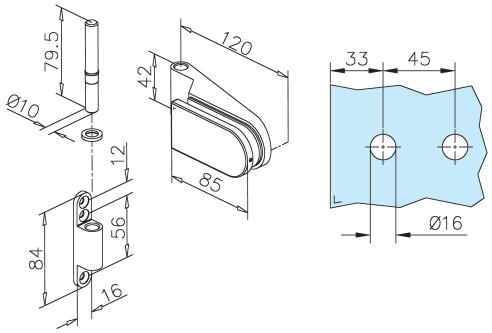

Stainless steel design Art.no.	Chrome design Art.no.	glass	
45.2250.000.20	45.2250.000.23	8 - 10 mm	1

INFO 45.2250.000...

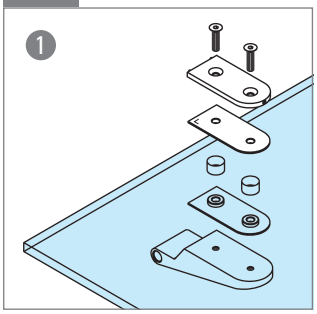

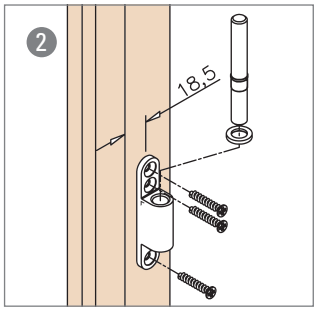

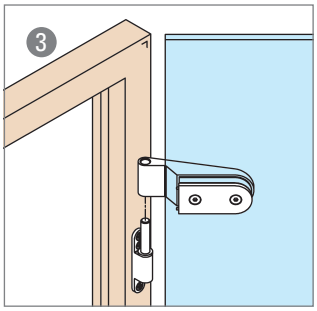

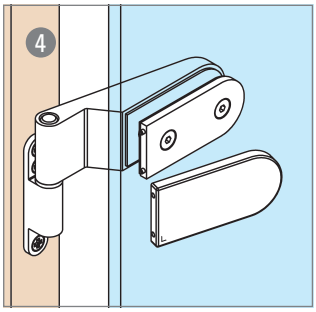

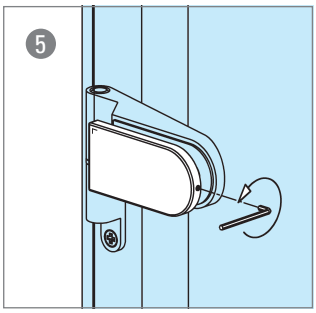

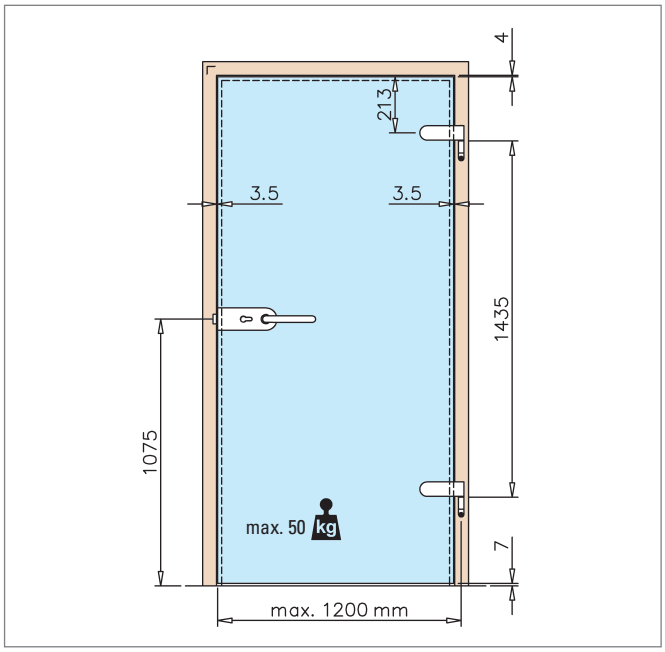

Door hinge - 2270

Stainless steel design Art.no.	Chrome design Art.no.	glass	
45.2270.000.20	45.2270.000.23	8 - 10 mm	1

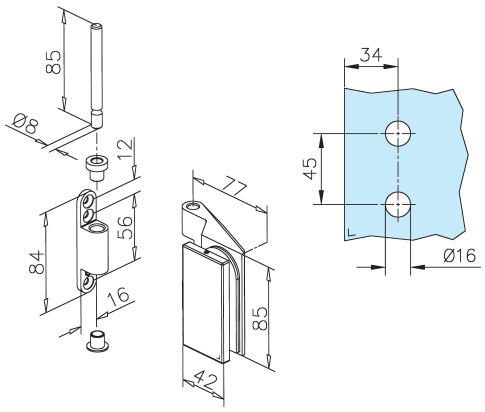

INFO 45.2270.000...

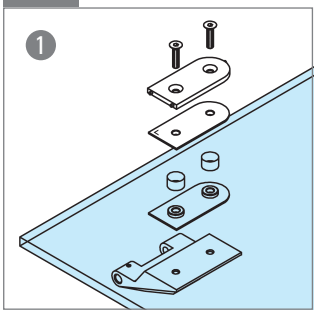

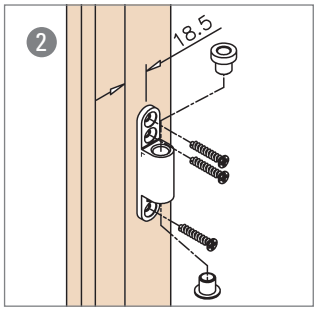

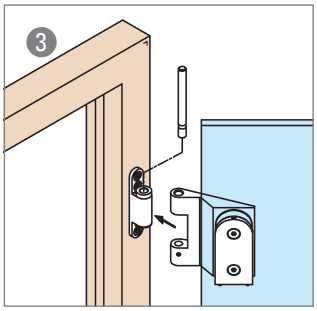

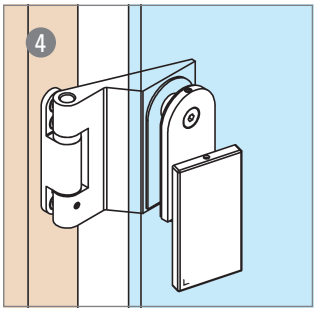

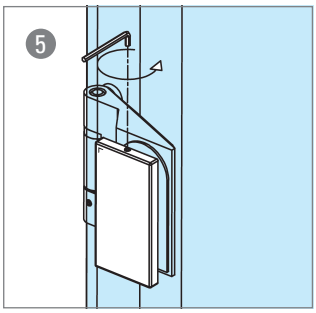

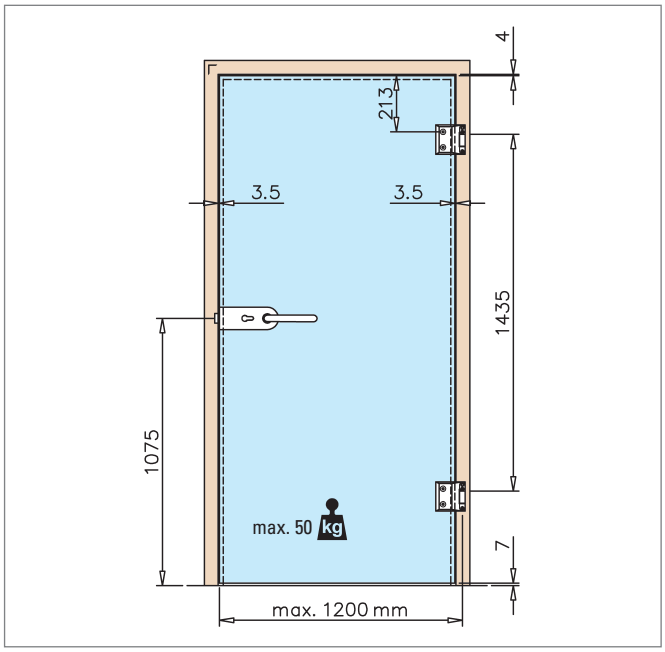

1

Door hinge - 101

glass/wall

Stainless steel design Art.no.	Chrome design Art.no.	glass	
41.0101.090.12	41.0101.090.10	8 - 12 mm	1

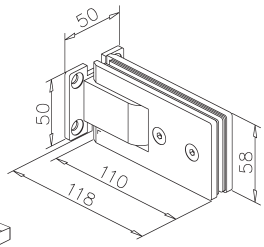

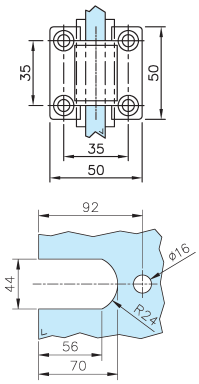

Door hinge - 102 / 090

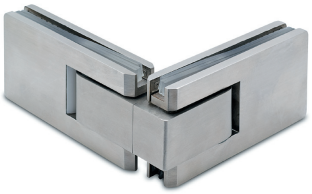

glass/glass

Stainless steel design Art.no.	Chrome design Art.no.	glass	
41.0102.090.12	41.0102.090.10	8 - 12 mm	1

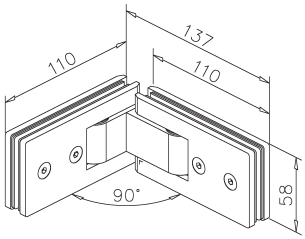

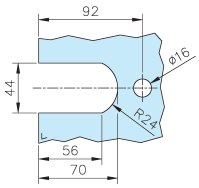

INFO 41.0101.090...

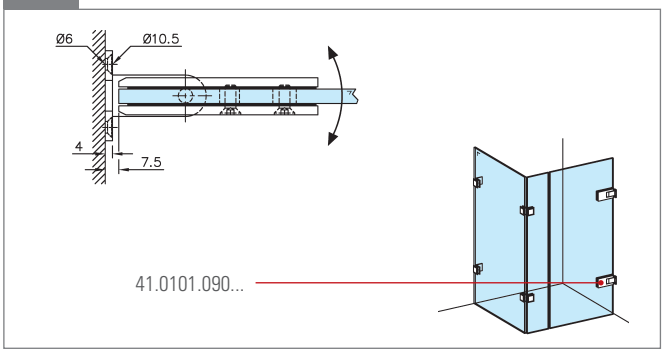

INFO 41.0102.090...

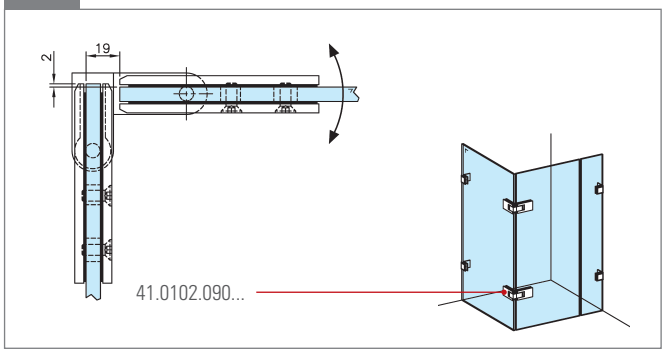

INFO

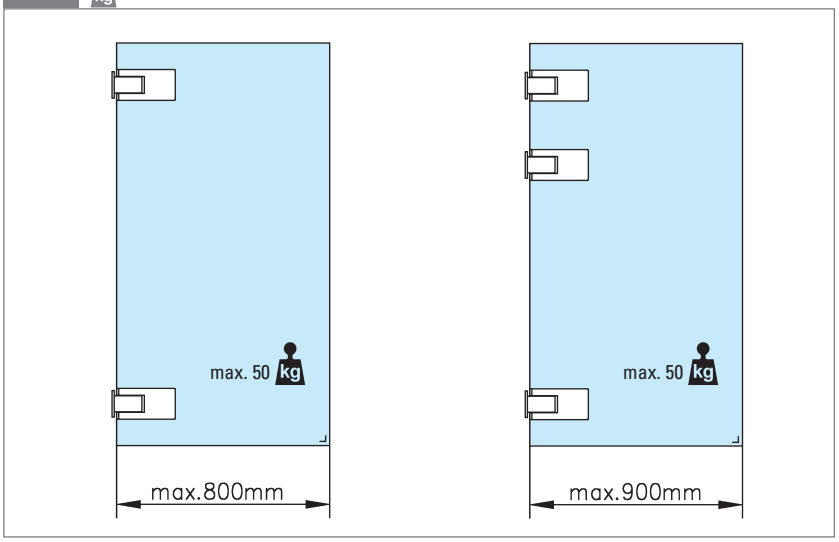

Door hinge - 102 / 135

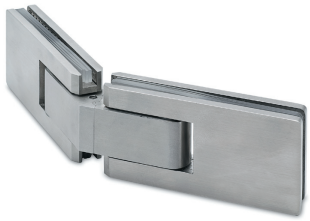

glass/glass

Stainless steel design Art.no.	Chrome design Art.no.	glass	
41.0102.135.12	41.0102.135.10	8 - 12 mm	1

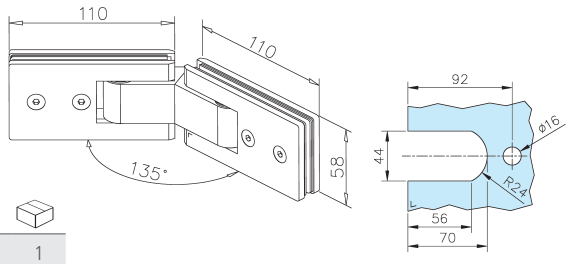

Door hinge - 102 / 180

glass/glass

Stainless steel design Art.no.	Chrome design Art.no.	glass	
41.0102.180.12	41.0102.180.10	8 - 12 mm	1

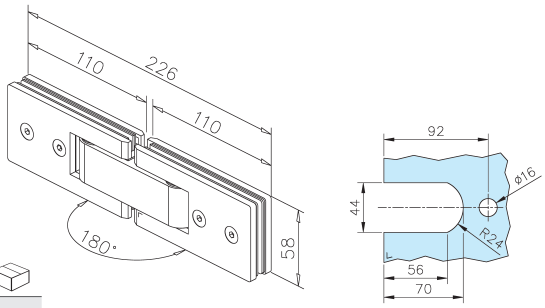

INFO 41.0102.135...

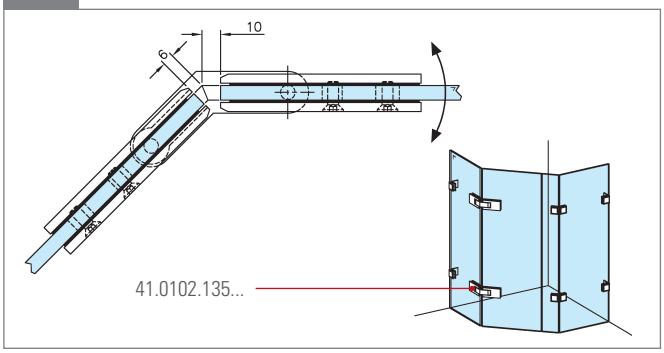

INFO 41.0102.180...

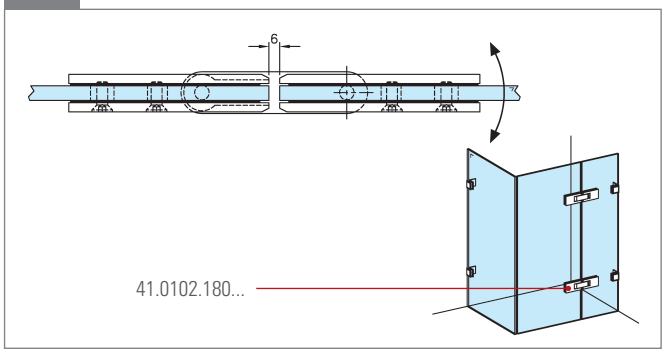

1

Door hinge - 3012

glass/wall

Stainless steel design Art.no.	Chrome design Art.no.	glass	
41.3012.090.12	41.3012.090.10	8 - 12 mm	1

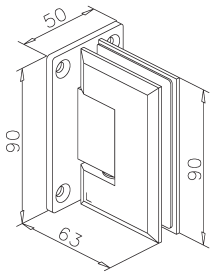

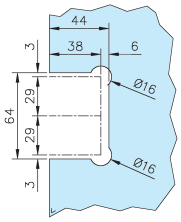

Door hinge - 3112

glass/wall

Stainless steel design Art.no.	Chrome design Art.no.	glass	
41.3112.090.12	41.3112.090.10	8 - 12 mm	1

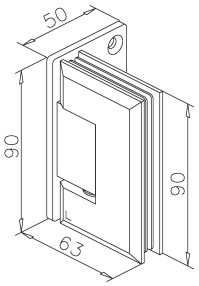

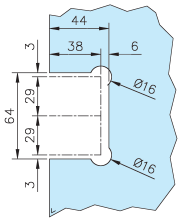

Door hinge - 3212 / 090

glass/glass

Stainless steel design Art.no.	Chrome design Art.no.	glass	
41.3212.090.12	41.3212.090.10	8 - 12 mm	1

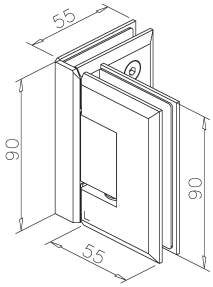

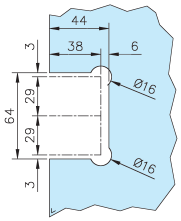

INFO

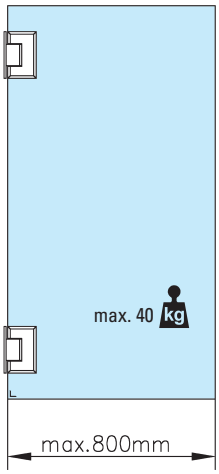

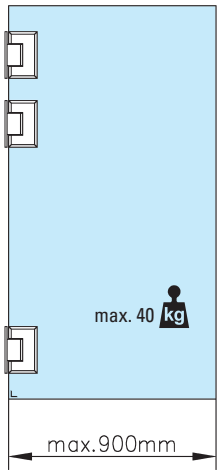

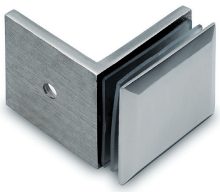

Wall fixations
104

Door hinge - 3212 / 135

glass/glass

Stainless steel design Art.no.	Chrome design Art.no.	glass	
41.3212.135.12	41.3212.135.10	8 - 12 mm	1

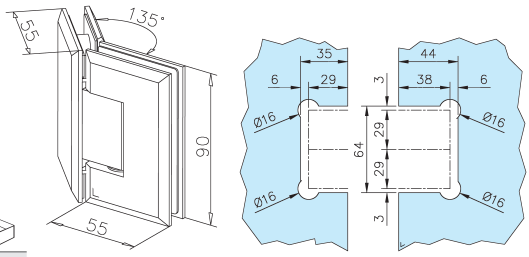

Door hinge - 3212 / 180

glass/glass

Stainless steel design Art.no.	Chrome design Art.no.	glass	
41.3212.180.12	41.3212.180.10	8 - 12 mm	1

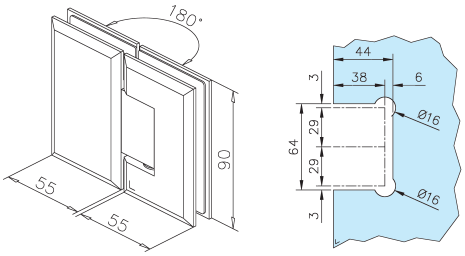

INFO **41.3212.135...**

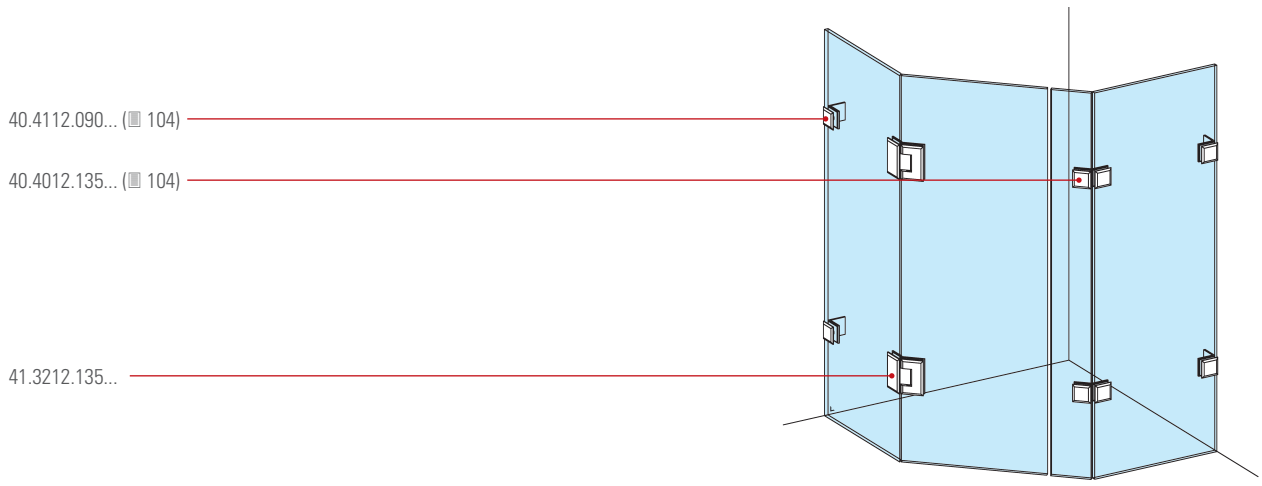

1

Door hinge - 5012

ADJUST-ABLE

glass/wall

Stainless steel design Art.no.	Chrome design Art.no.	glass	
41.5012.090.12	41.5012.090.10	8 - 10 mm	2

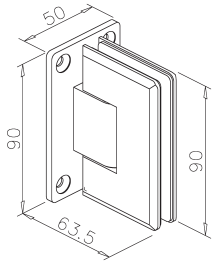

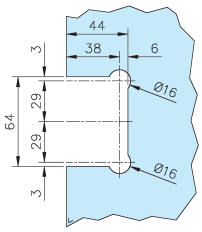

Door hinge - 5112

ADJUST-ABLE

glass/wall

Stainless steel design Art.no.	Chrome design Art.no.	glass	
41.5112.090.12	41.5112.090.10	8 - 10 mm	2

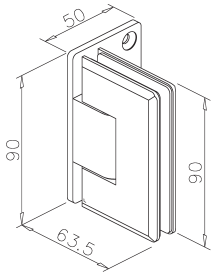

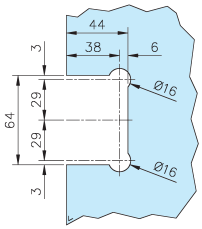

Door hinge - 5212

ADJUST-ABLE

glass/glass

Stainless steel design Art.no.	Chrome design Art.no.	glass	
41.5212.180.12	41.5212.180.10	8 - 10 mm	1

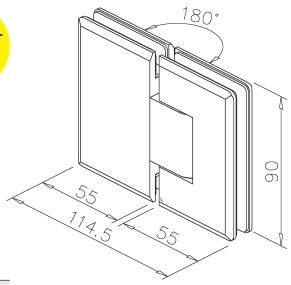

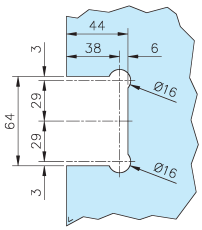

INFO

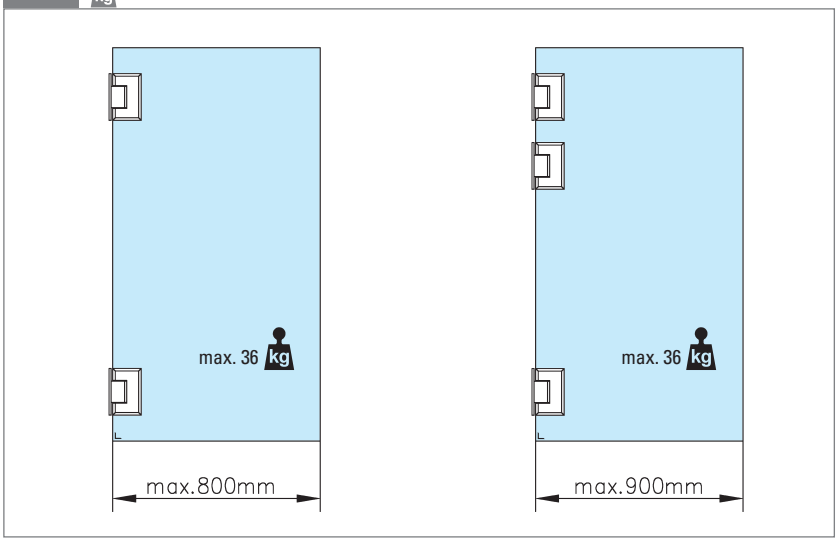

INFO 41.5012.090...

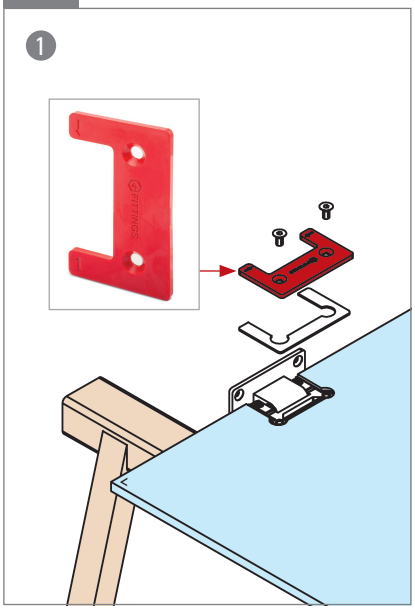

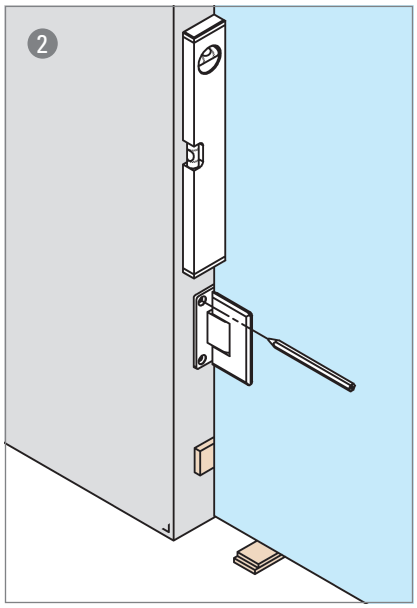

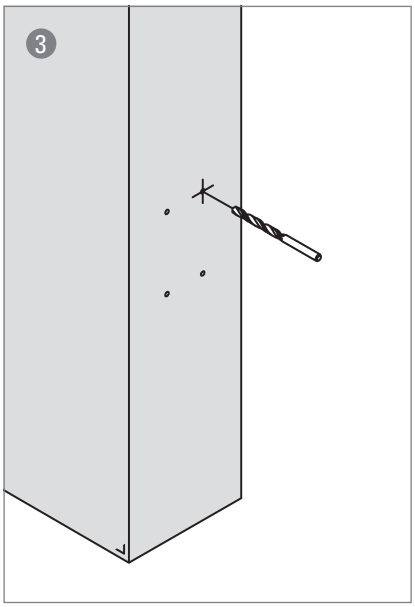

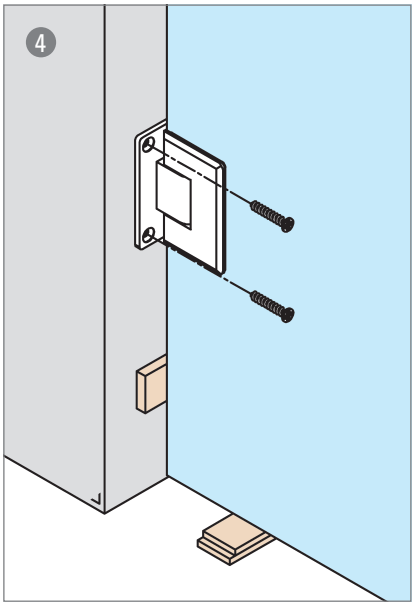

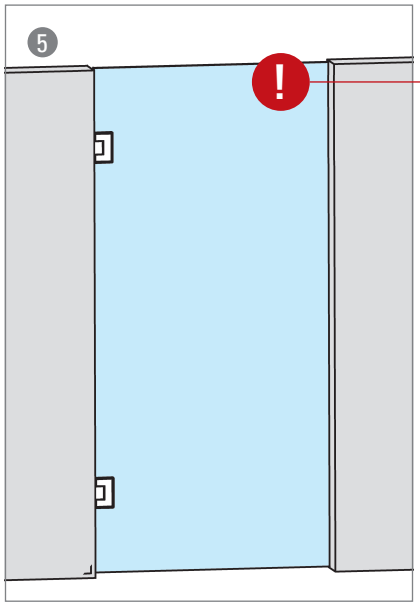

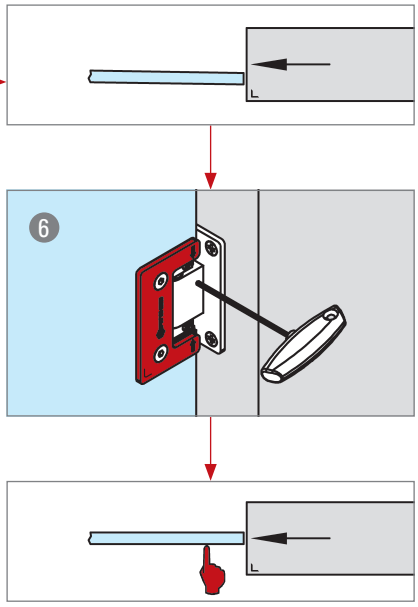

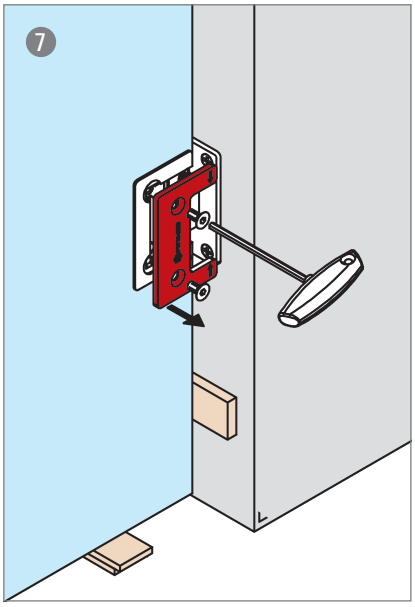

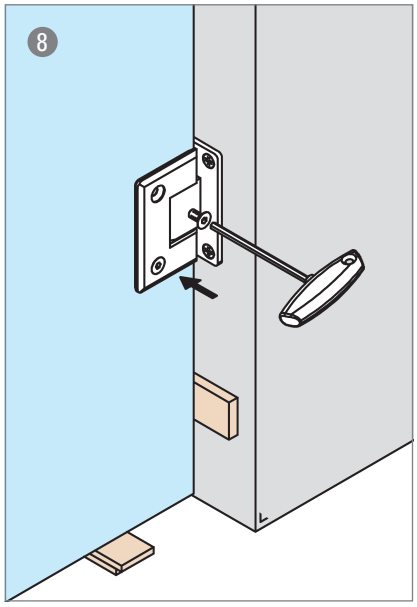

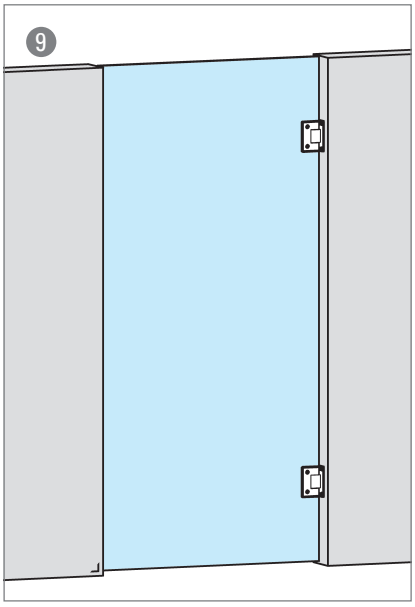

Glass clamp - 4012 / 090

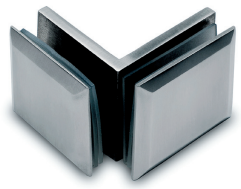

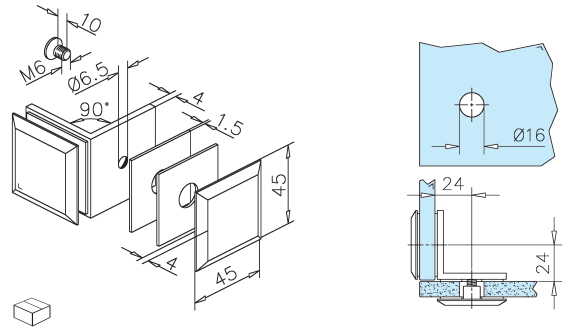

glass/glass

Stainless steel design Art.no.	Chrome design Art.no.	glass	
40.4012.090.12	40.4012.090.10	8 - 12 mm	1

3

Glass clamp - 4012 / 135

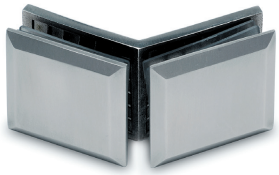

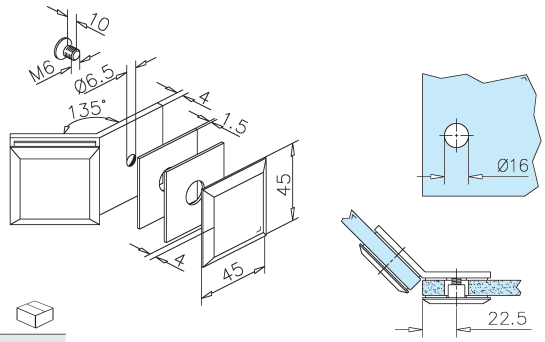

glass/glass

Stainless steel design Art.no.	Chrome design Art.no.	glass	
40.4012.135.12	40.4012.135.10	8 - 12 mm	1

Glass clamp - 4012 / 180

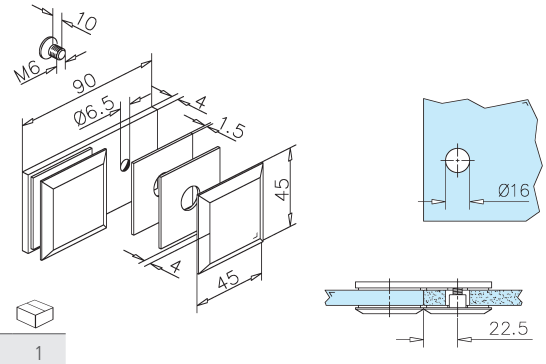

glass/glass

Stainless steel design Art.no.	Chrome design Art.no.	glass	
40.4012.180.12	40.4012.180.10	8 - 12 mm	1

Glass clamp - 4112

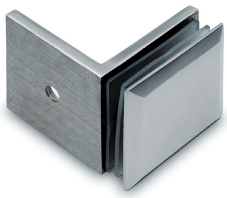

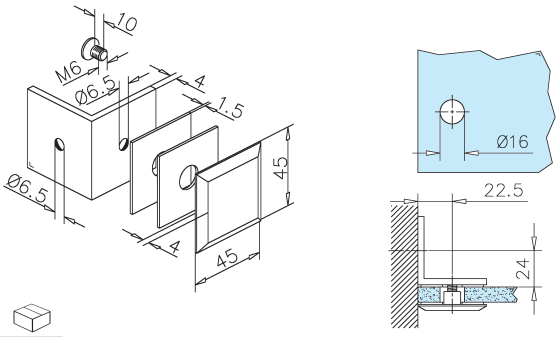

glass/wall

Stainless steel design Art.no.	Chrome design Art.no.	glass	
40.4112.090.12	40.4112.090.10	8 - 12 mm	1

Glass clamp - 4115

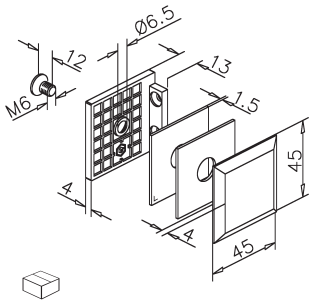

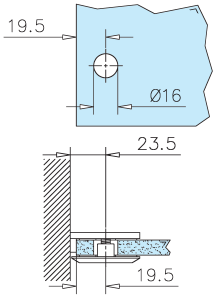

glass/wall

Stainless steel design Art.no.	Chrome design Art.no.	glass	
40.4115.090.12	40.4115.090.10	8 - 12 mm	1

INFO 40.4012...

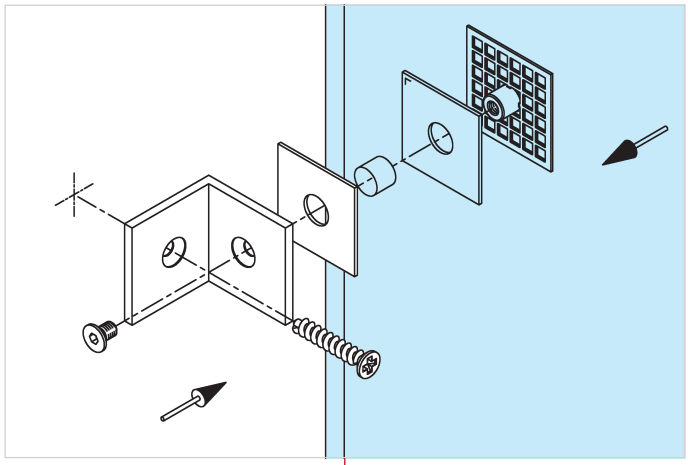

40.4112.090...

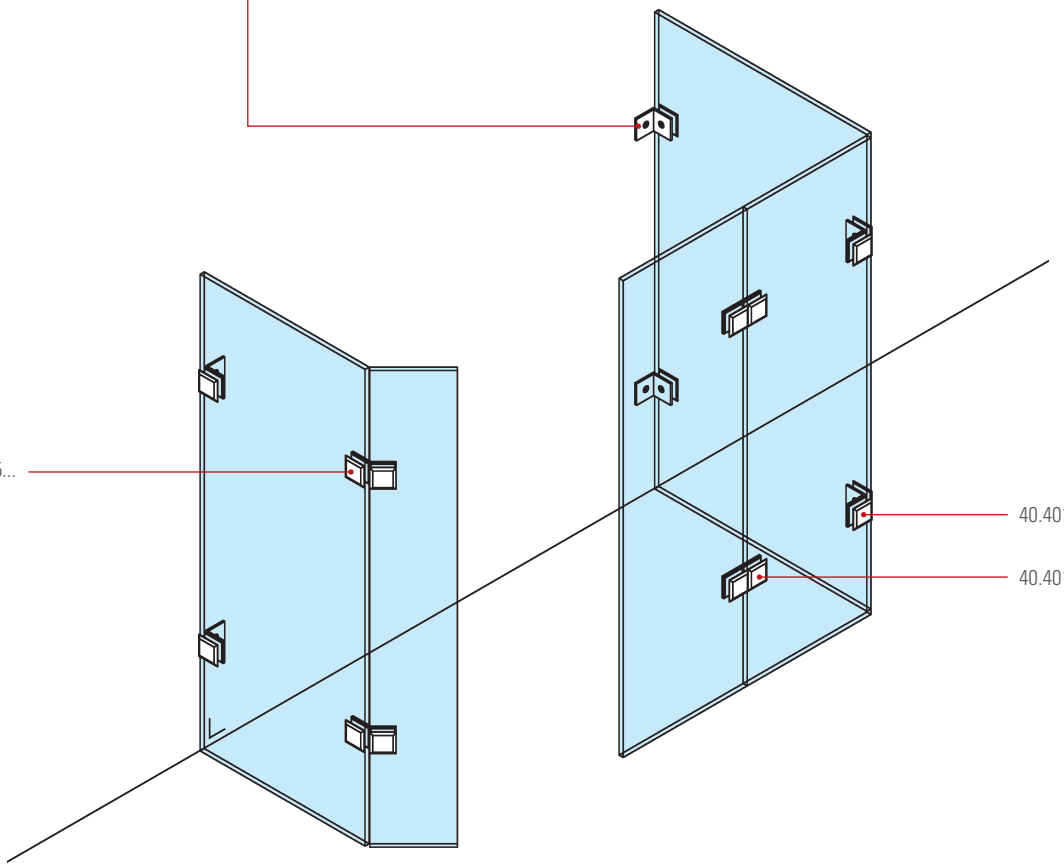

40.4012.135...

40.4012.090...

40.4012.180...

Glass clamp - 0101 / 090

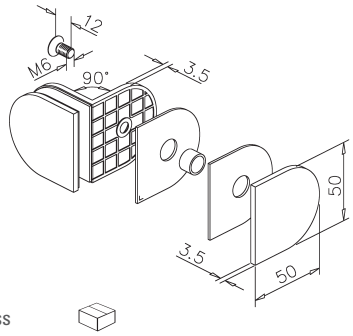

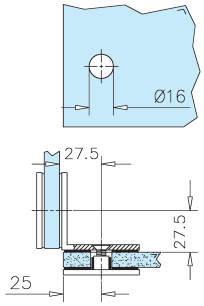

glass/glass

Stainless steel design	Chrome design		
Art.no.	Art.no.	glass	
40.0101.090.12	40.0101.090.10	8 - 10 mm	1

3

Glass clamp - 0101 / 135

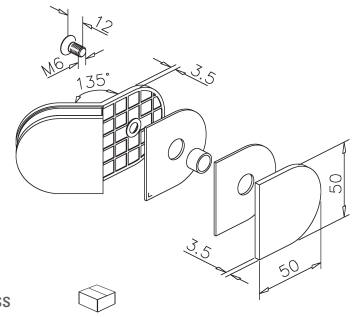

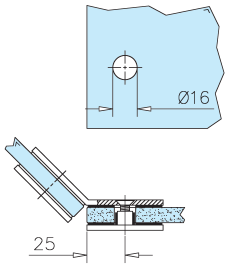

glass/glass

Stainless steel design	Chrome design		
Art.no.	Art.no.	glass	
40.0101.135.12	40.0101.135.10	8 - 10 mm	1

Glass clamp - 0101 / 180

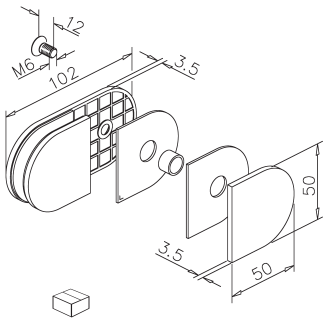

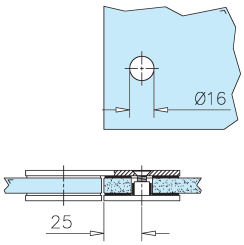

glass/glass

Stainless steel design	Chrome design		
Art.no.	Art.no.	glass	
40.0101.180.12	40.0101.180.10	8 - 10 mm	1

Glass clamp - 0102

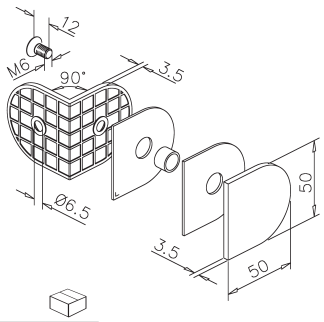

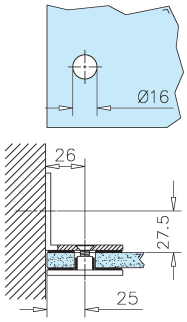

glass/wall

Stainless steel design	Chrome design		
Art.no.	Art.no.	glass	
40.0102.090.12	40.0102.090.10	8 - 10 mm	1

INFO **40.0101...**

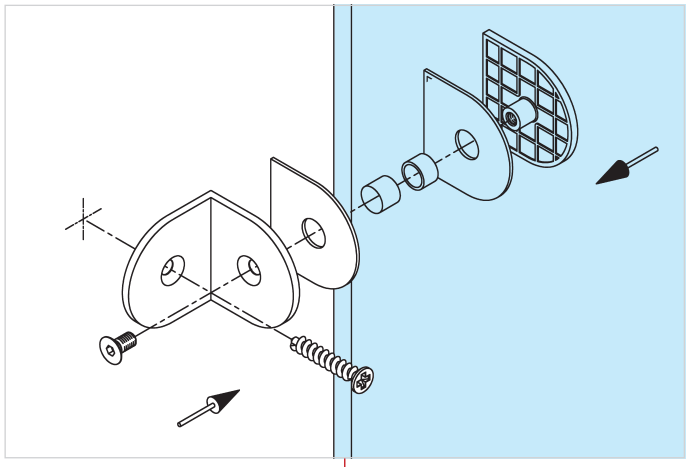

40.0102.090...

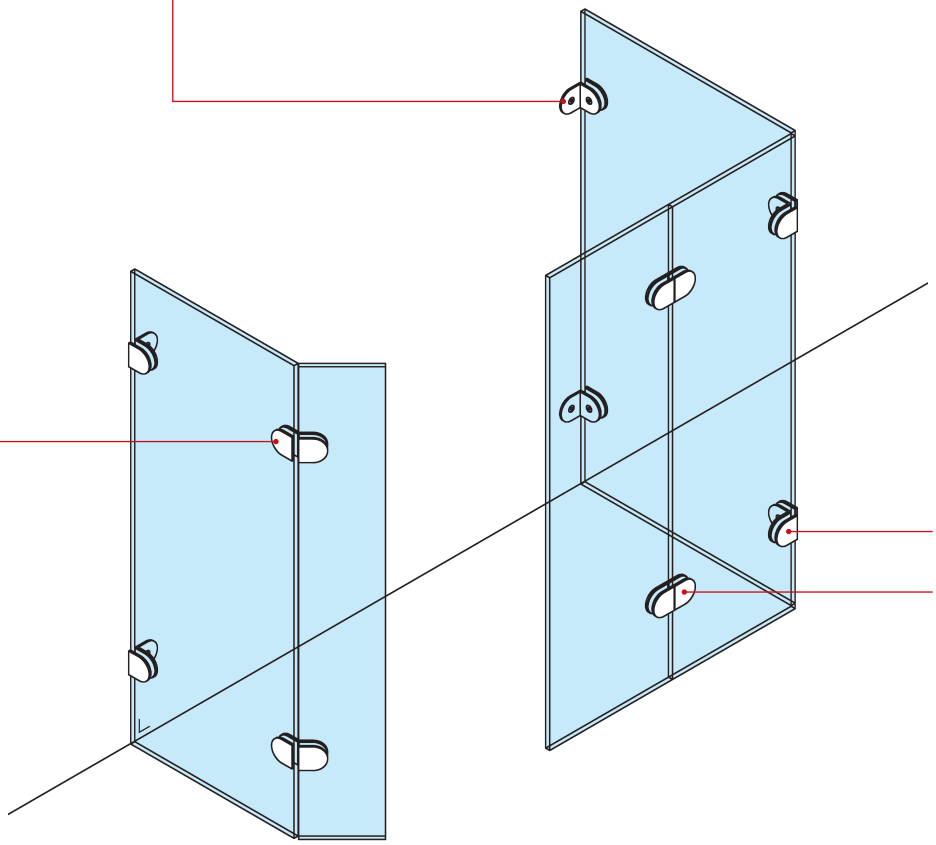

5

FITTINGS

Sanitary interior

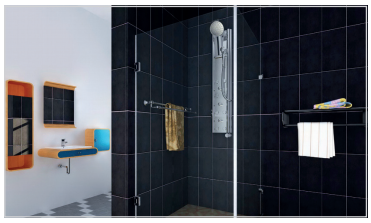

5 Shower cubicles 174

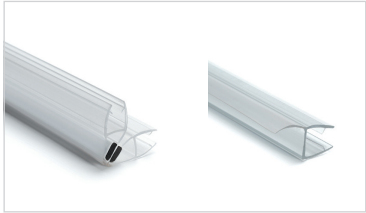

5 Seals 177

5 Partition walls 180

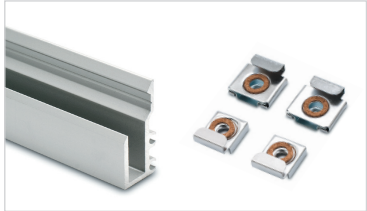

5 Mirror systems 182

Shower cubicle - 4010

Stainless steel design	Chrome design	
Art.no.	Art.no.	glass
29.4010.090.12	29.4010.090.10	8 - 10 mm

INFO Products

2 x
41.3112.090...
(▤ 42)

2 x
40.4112.090...
(▤ 104)

1 x
47.0102.025...
(▤ 95)

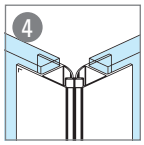

1 x
19.4010.090.00
(▤ 177)

1 x
19.4012.000.00
(▤ 178)

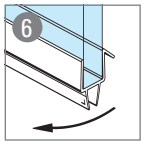

1 x
19.4013.000.00
(▤ 178)

INFO 29.4010.090...

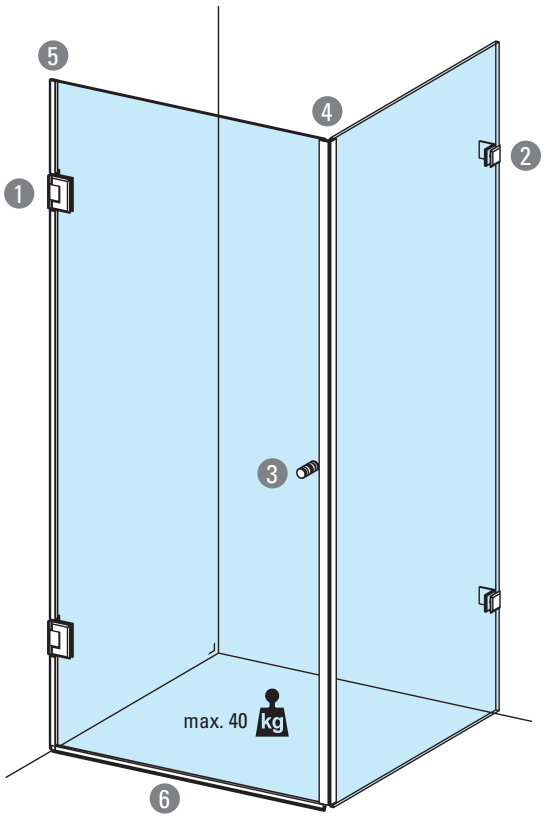

Example for glass 800 x 1800 mm (2x)
(glass thickness 8 - 10 mm).
Prices for glass upon request.

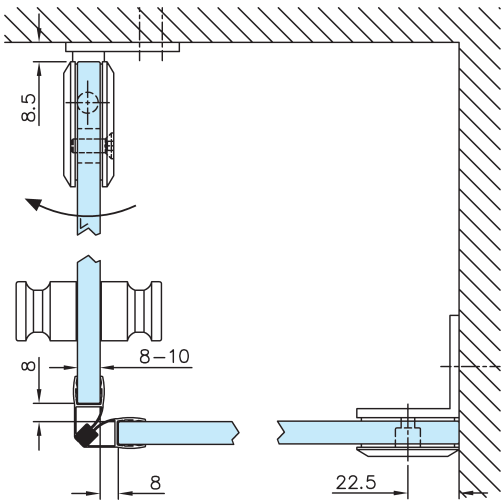

Shower cubicle - 4011

Stainless steel design	Chrome design	
Art.no.	Art.no.	glass
29.4011.090.12	29.4011.090.10	8 - 10 mm

INFO Products

2 x
41.0302.000...
(▤ 15)

2 x
40.4112.090...
(▤ 104)

1 x
47.0102.025...
(▤ 95)

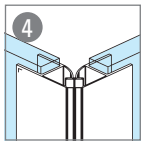

1 x
19.4010.090.00
(▤ 177)

1 x
19.4012.000.00
(▤ 178)

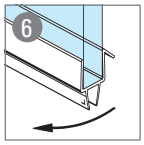

1 x
19.4013.000.00
(▤ 178)

INFO 29.4011.090...

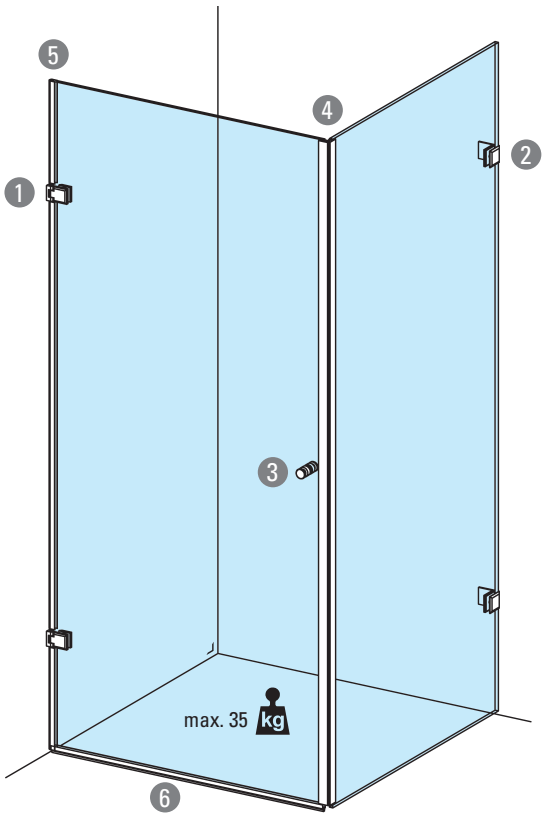

Example for glass 800 x 1800 mm (2x)
(glass thickness 8 - 10 mm).
Prices for glass upon request.

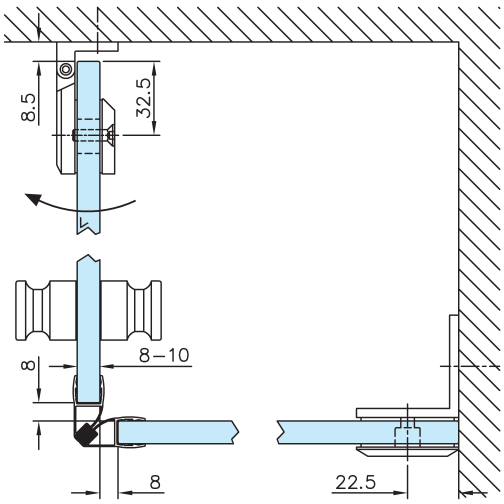

Shower cubicle - 4012

Stainless steel design	Chrome design	
Art.no.	Art.no.	glass
29.4012.090.12	29.4012.090.10	8 - 10 mm

INFO Products

2 x
41.0202.000...
(▤ 14)

2 x
40.0102.090...
(▤ 106)

1 x
47.0102.025...
(▤ 95)

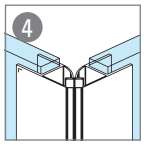

1 x
19.4010.090.00
(▤ 177)

1 x
19.4012.000.00
(▤ 178)

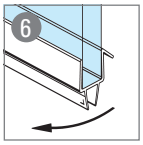

1 x
19.4013.000.00
(▤ 178)

INFO 29.4012.090...

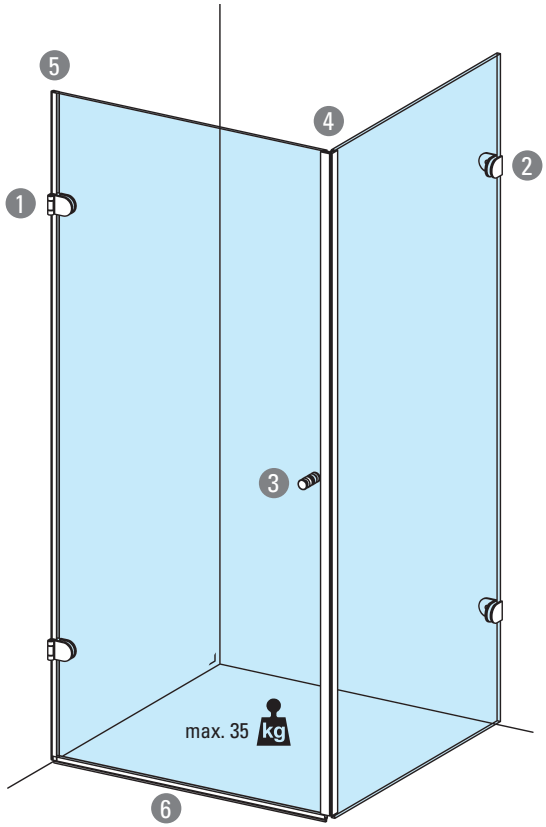

Example for glass 800 x 1800 mm (2x)
(glass thickness 8 - 10 mm).
Prices for glass upon request.

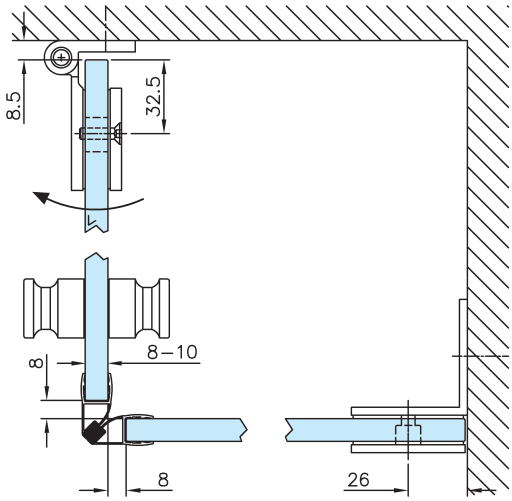

Magnetic seal - 4010 / 090

90°, PVC (pair)

Art.no.	glass	B	X	L	
19.4010.090.01	8 mm	26 mm	12 mm	2500 mm	1
19.4010.090.00	10 mm	28 mm	10 mm	2500 mm	1

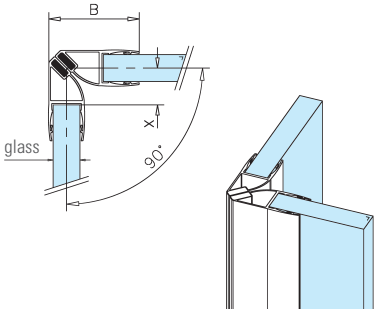

Magnetic seal - 4010 / 135

135°, PVC (pair)

Art.no.	glass	B	X	L	
19.4010.135.01	8 mm	25 mm	12 mm	2500 mm	1
19.4010.135.00	10 mm	25 mm	12 mm	2200 mm	1

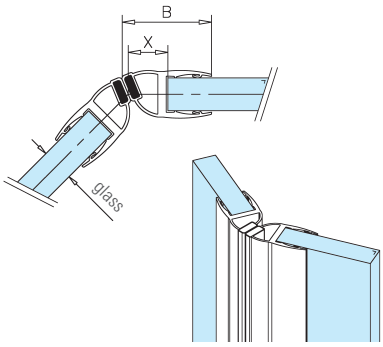

Magnetic seal - 4010 / 180

180°, PVC (pair)

Art.no.	glass	B	X	L	
19.4010.180.01	8 mm	42 mm	22 mm	2500 mm	1
19.4010.180.00	10 mm	45 mm	22 mm	2200 mm	1

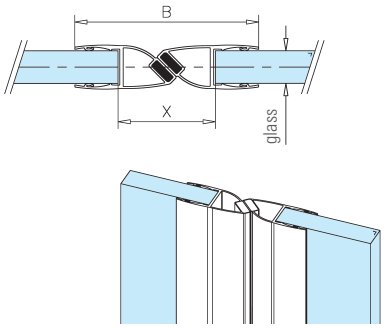

Seal lip - 4011

for glass door, PVC

Art.no.	glass	B	X	L	
19.4011.000.01	8 mm	28 mm	5 - 10 mm	2500 mm	1
19.4011.000.00	10 mm	28 mm	5 - 12 mm	2500 mm	1

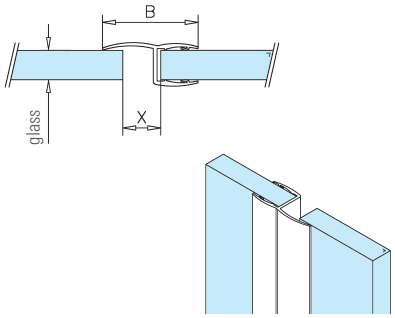

Stripe lip - 4012

for glass door, PVC

Art.no.	glass	B	X	L	
19.4012.000.01	8 mm	18 mm	7 mm	2500 mm	1
19.4012.000.00	10 mm	18 mm	7 mm	2500 mm	1

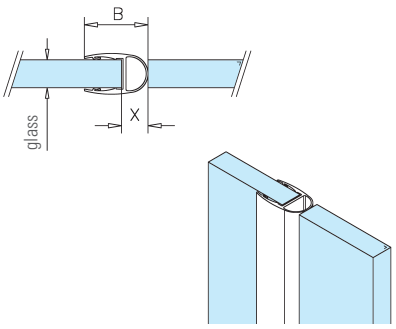

5

Seal - 4013

for glass door, PVC

Art.no.	glass	B	X	L	
19.4013.000.00	10 mm	22 mm	8 mm	2500 mm	1

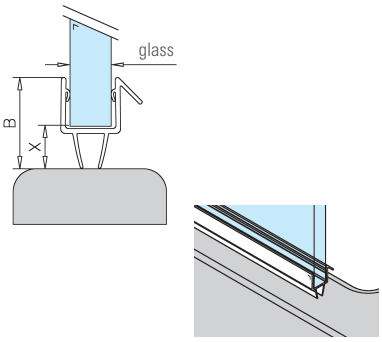

Seal - 4014

for glass door, PVC

Art.no.	glass	B	X	L	
19.4014.000.00	6 mm	20 mm	10 mm	2500 mm	1

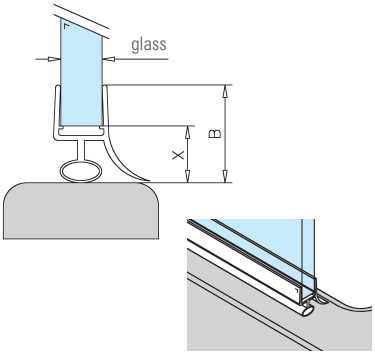

Seal lip - 4015

for glass door, PVC

Art.no.	glass	L	
19.4015.000.01	8 mm	2500 mm	1
19.4015.000.02	10 mm	2500 mm	1

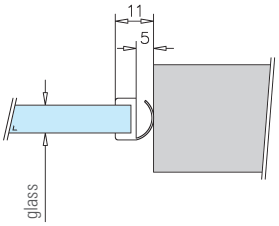

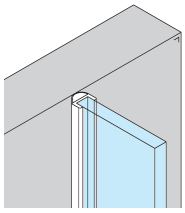

Seal lip - 4016

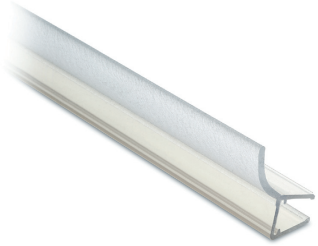

for glass door, PVC

Art.no.	glass	L	
19.4016.000.01	6 - 8 mm	2500 mm	1

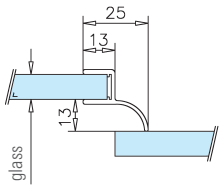

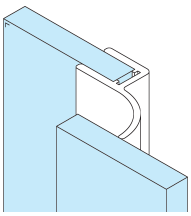

Seal lip - 4017

front rabbet 180°, for glass door, PVC

Art.no.	glass	L	
19.4017.000.01	8 mm	2500 mm	1
19.4017.000.00	10 mm	2500 mm	1

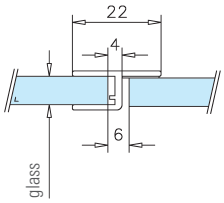

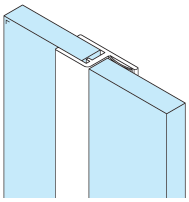

Seal lip - 4018

corner rabbet 90°, for glass door, PVC

Art.no.	glass	L	
19.4018.000.01	6 - 8 mm	2500 mm	1

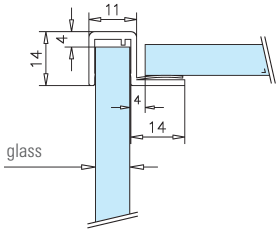

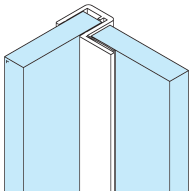

Plastic connecting profile - 4019

New - with adhesive tape on both sides

for panels, transparent

Art.no.	glass	L	
19.4019.010.00	10 - 10,76 mm	3000 mm	1
19.4019.012.00	12 - 12,76 mm	3000 mm	1

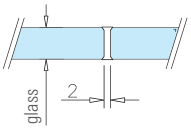

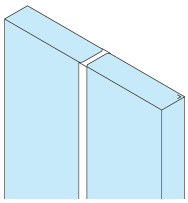

Floor waterguard strip - 4020

half round, transparent

Art.no.	L	
19.4020.000.00	2000 mm	1

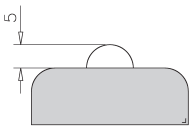

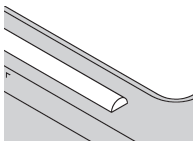

INFO Mounting

Redacryl -
high performance tape

Art.no.
91.2800.000.00 (305)

Tube holder - 836

closed

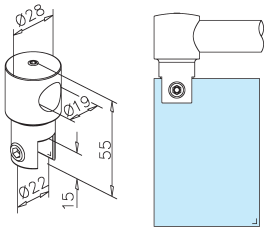

Stainless steel design Art.no.	Chrome design Art.no.	glass	
40.0836.019.20	40.0836.019.23	8 - 12 mm	4

Tube holder - 835

open

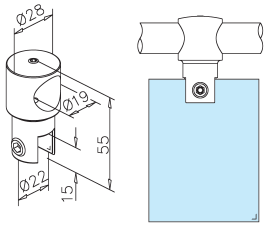

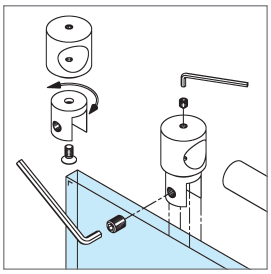

Stainless steel design Art.no.	Chrome design Art.no.	glass	
40.0835.019.20	40.0835.019.23	8 - 12 mm	4

5

Tube mounting bracket - 626

45°

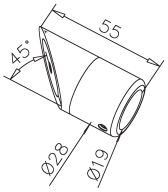

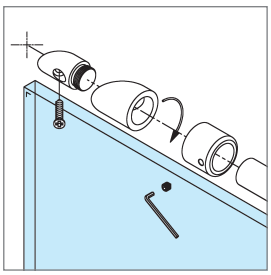

Stainless steel design Art.no.	Chrome design Art.no.	
40.0626.019.12	40.0626.019.10	2

Tube mounting bracket - 515

90°

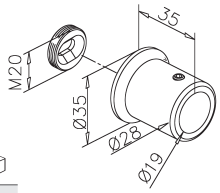

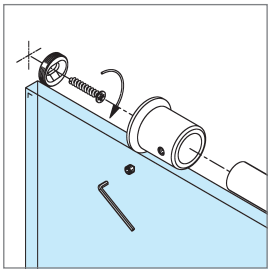

Stainless steel design Art.no.	Chrome design Art.no.	
40.0515.019.12	40.0515.019.10	4

Tube joint - 312

adjustable

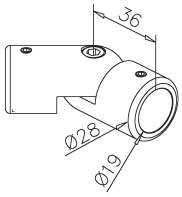

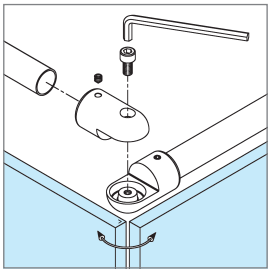

Stainless steel design Art.no.	Chrome design Art.no.	
40.0312.019.12	40.0312.019.10	2

INFO **Partition walls**

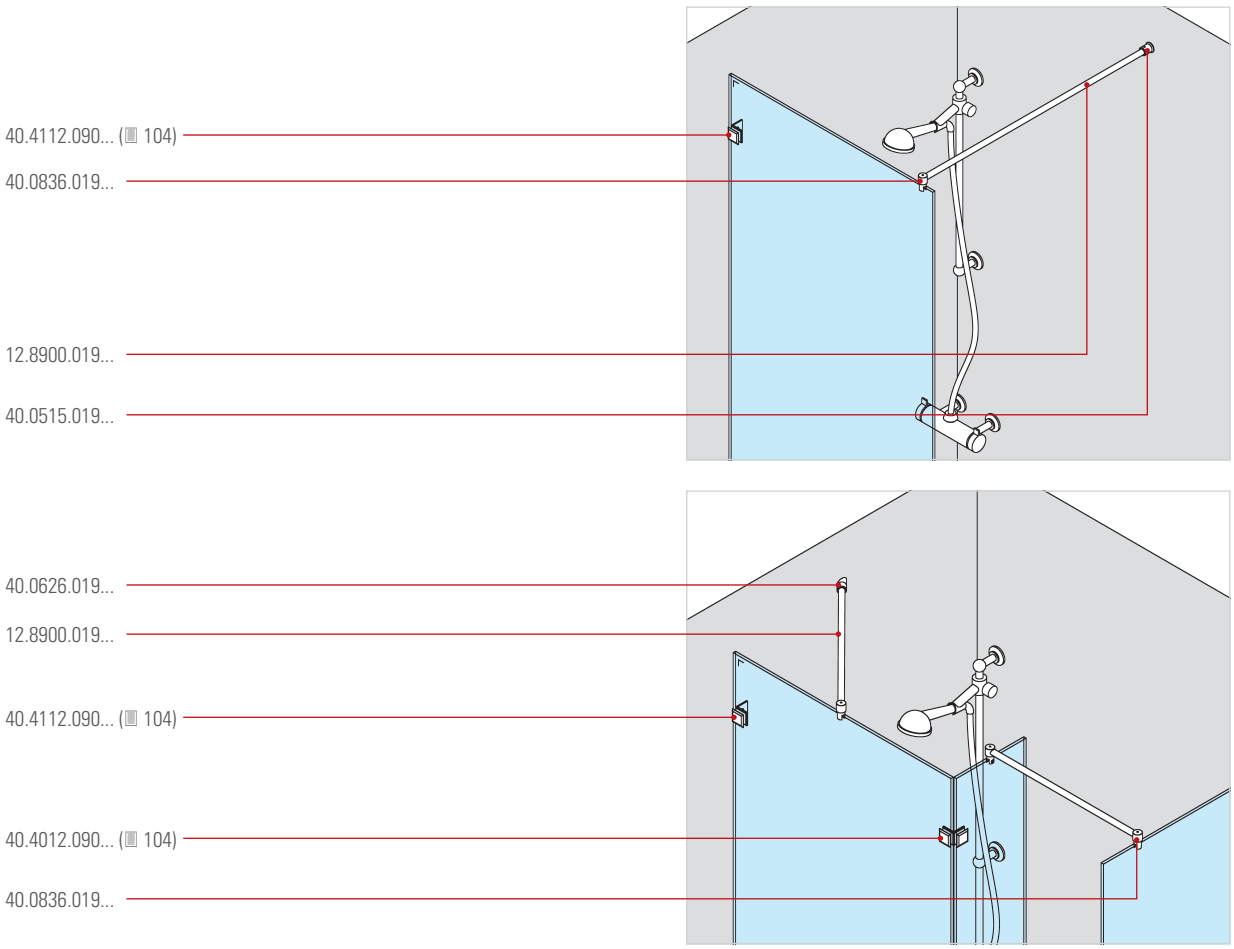

Tube - 900

Stainless steel design Art.no.	Chrome design Art.no.	L
12.8910.019.12	12.8910.019.10	1000 mm
12.8912.019.12	12.8912.019.10	1250 mm
12.8925.019.12	12.8925.019.10	2500 mm
12.8900.019.12	12.8900.019.10	cutted

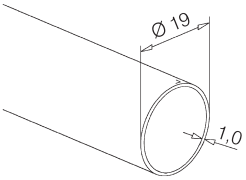

End caps
▤ 280